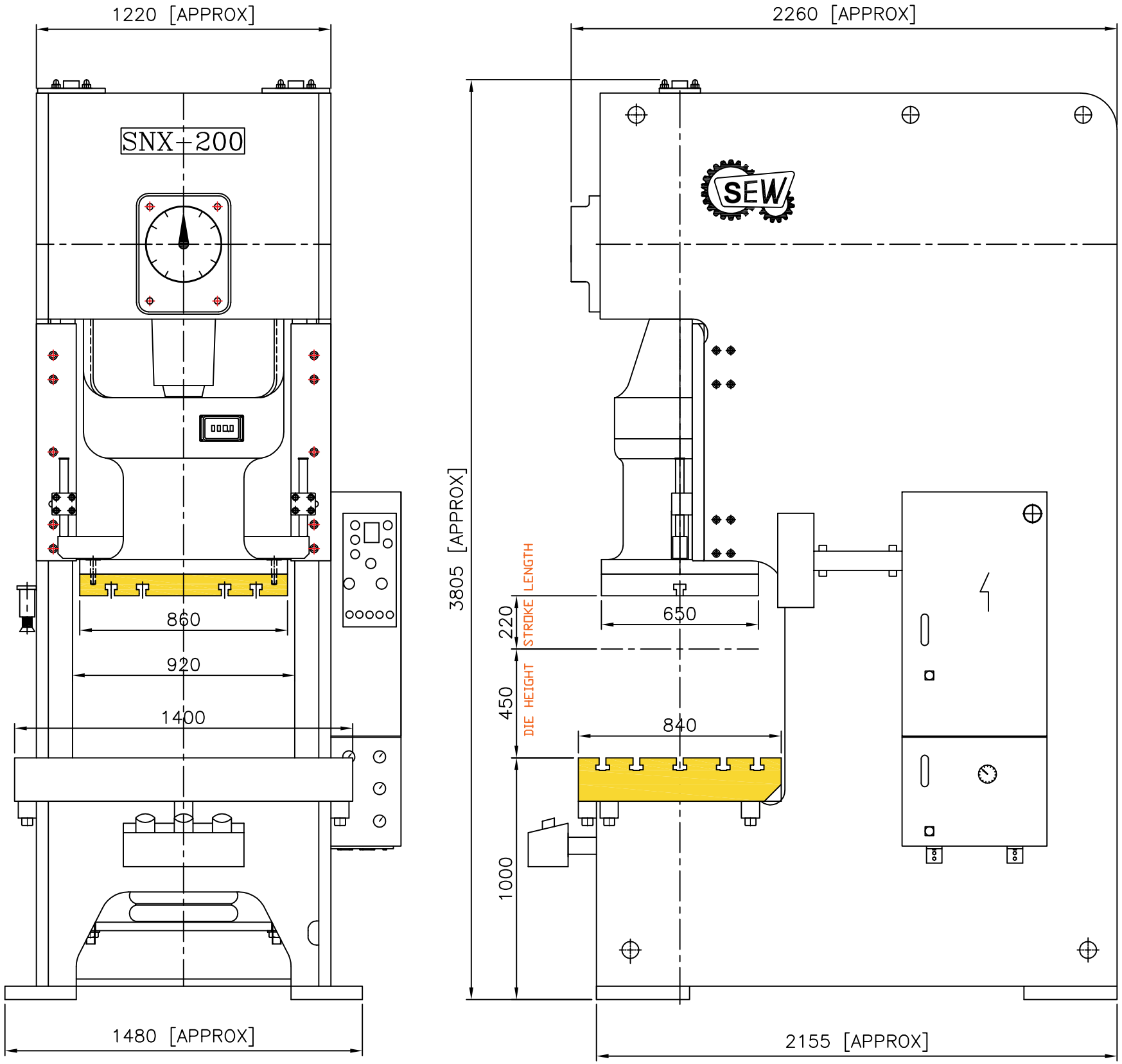

SPECIFICATION OF SNX-200 TONNE [GEARED]	
PRESS CAPACITY IN TONNE	200 Tonne
STROKE LENGTH [FIX]	220 mm
TONNAGE RATING POINT [B.D.C.]	6 mm
SLIDE ADJUSTMENT	120 mm[MOTORISED]
SLIDE AREA [LRxFB]	860x650 mm
DIE HEIGHT [SDAU]	450 mm
BOLSTER AREA [LRxFB]	1400x840 mm
BOLSTER THICKNESS	175 mm
THROAT DEPTH	435 mm
CLEAR DIST. BETWEEN UPRIGHTS	920 mm
MAIN MOTOR [HP x RPM]	20x4P
MACHINE SPM.	35
FLOOR TO TOP OF BOLSTER	1000 mm
OVER LOAD SAFETY	HYD. OVER LOAD
LUBRICATION	GREASE LUB.
CAM LIMIT SWITCH	ENCODER BASE E-CAMS

VARIABLE	
MACHINE SPM.	25~45
MAIN MOTOR [HP x RPM]	25X4P

DIE CUSHION (OPTIONAL)	
PNEUMATIC DIE CUSHION	14 Tonne.
DIE CUSHION STK. LENGTH	110
DIE CUSHION PAD AREA	640x440 mm

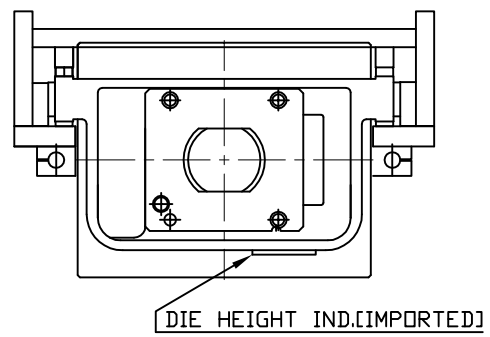

SIX POINT GIBBING

Blanking Operation - As per SEW recommendation, the maximum blanking load on the press should not exceed 60% of the press rated capacity when the working load is uniformly distribute in the bolster covering minimum 65% of central area

				NAME OF M/C	SNX-200	QTY.	01
				SCALE	N.T.S.	SURFACE FINISH	WEIGHT(KGS)
				DATE	01/07/2021	0.8 1.6 3.2	***
				DRAWN	MAYUR		
				CHKD.		MATERIAL :	
				APPD.		***	
REV.	DESCRIPTION	SIGN	DATE	PROJECTION		NAME :	
						G.A. DRAWING	
						DRG.NO.	
						SNX-200-SG-FS-08	

SINGHAL
POWER PRESSES PVT.LTD